Book 2023 Page 468

Document 2023 468 Type 06 007 Pages 1
Date 3/01/2023 Time 4:03:34PM
Rec Amt $7.00

Daneen Schindler, RECORDER/REGISTRAR
DELAWARE COUNTY IOWA

PREPARED BY: RANDALL L. RATTENBORG 105 WEST MAIN STREET MANCHESTER, IA 52057, 563-927-2434

UNITED STATES PUBLIC LAND SURVEY CORNER CERTIFICATE

Land Survey Monuments situated in Section 30, Township 89 North, Range 6 West of the Fifth Principal Meridian, Delaware County, Iowa.

Previously recorded in County Recorder's Office in SEE DESCRIPTIONS
(book, page, document number, etc.)

E 1/4 CORNER, Found cut "X" as shown in Corner Certificate recorded in Book 2020, Page 4622. This certificate being issued due to missing tie objects.

W 1/4 CORNER, Set 1/2" rebar w/orange cap #17939 on line between the NW Corner and SW Corner and in line with the fence to the east. Looked for steel rod over granite rock as shown in old ties for Sec. 25, T89N, R7W from Buchanan County Engineers office. Did not find rod.

CENTER OF SECTION, Set 1/2" rebar w/orange cap #17939 at intersection of quarter- quarter lines. This location fits the field evidence.

PLAN VIEW

(Show a minimum of three reference ties to durable physical objects, relevant monuments and physical conditions that will enable recovery of the corner.)

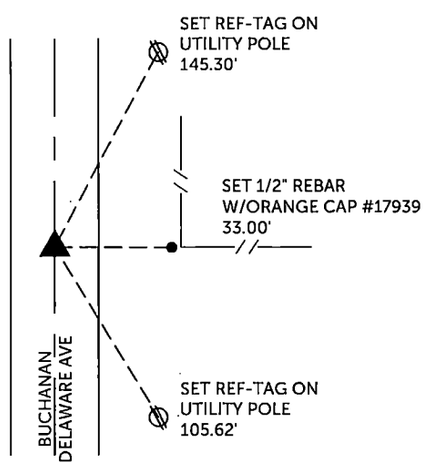

W 1/4 CORNER
SET 1/2" REBAR W/ ORANGE CAP#17939

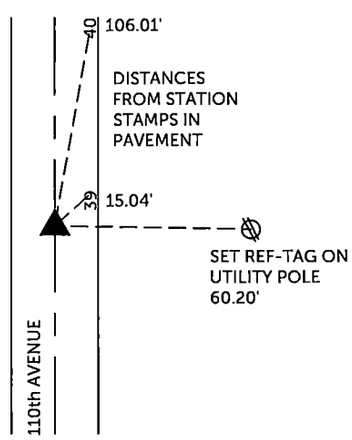

E 1/4 CORNER
FOUND CUT "X"

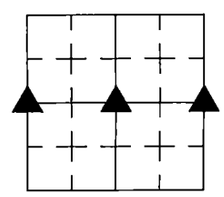

SECTION 30, T 89 N, R 6 W

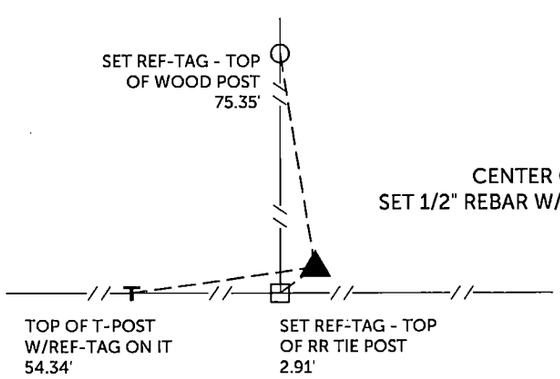

TIES ARE TO PLAT IN SECTION 30, T 89 N, R 6 W — PARCELS 2023-05, 2023-06, 2023-07

BURRINGTON GROUP, INC. PROJECT NO. 22-174

I HEREBY CERTIFY THAT THIS LAND SURVEYING DOCUMENT WAS PREPARED AND THE RELATED SURVEY WORK WAS PERFORMED BY ME OR UNDER MY DIRECT PERSONAL SUPERVISION AND THAT I AM A DULY LICENSED PROFESSIONAL LAND SURVEYOR UNDER THE LAWS OF THE STATE OF IOWA.

3/1/2023

Randall L. Rattenborg, P.L.S. License #17939 Date

My license renewal date is December 31, 2023

List Corners to be Indexed:	Section	Township	Range
E 1/4 CONER	30	T 89N	R 6 W
W 1/4 CORNER			
CENTER OF SECTION			

SEAL COVERS THIS SHEET ONLY

LICENSED PROFESSIONAL LAND SURVEYOR
RANDALL L. RATTENBORG
17939
IOWA

BURRINGTON GROUP, INC.
Civil Engineering | Land Surveying
105 W. Main Street Manchester, Iowa 52057